Acoustic Resonance in BB3 Long Crossovers

Index

1. Purpose 3

2. Scope 3

3. Definitions 3

4. General Procedure - Description 3

5. Methodology, analysis and interpretation of results 5

6. Acceptance Criteria 10

7. References 10

8. APPENDIX – Example of application for job 24I003 “Pembina” 11
   8.1 Pembina considering fresh water 11
   8.2 Pembina considering butane process fluid 14

1. Purpose

This document defines a method to predict possible acoustic resonance problem in BB3 long crossovers.

2. Scope

This procedure is applicable to BB3 volute type pumps.

3. Definitions

a	sound speed
f	critical frequency
λ	wave length
N	1, 2, 3 … harmonic

4. General Procedure - Description

Acoustic resonance problems can arise especially with relatively high energy levels BB3 volute casing pumps requested to operate over a wide range of flow conditions and speeds. They are caused by an interaction between the dynamic characteristics of the pump and one of its internal passages.

In particular pressure pulsations are generated every time that an impeller blade passes through close to volute lip, so at vane passing frequencies or a harmonic of vane passing. And the longer hydraulic passage that can be considered critical to produce an acoustic resonance is the crossover channel necessary for back-to-back impellers arrangement in BB3 multistage volute pumps.

If the pulse frequency corresponds to the acoustic resonance, then pressure waves can be amplified with factor up to 100 times higher than normal. The resulting large pressure pulsations interact with the pump rotor to cause unacceptable vibration levels [1].

In Mod.472 [2] it is implemented a simple analytical model to calculate critical frequency and so relative pump speed and corresponding critical passage length.

An internal pump passage can be treated as a piping system to predict acoustic resonance, applying existing analytical techniques based on elementary physics, the “organ pipe” resonance theory [1].

The main equation to be considered is the relationship between acoustic velocity, wavelength and frequency:

$$a = \lambda f$$

where

a is acoustic velocity, *m/s*

f is frequency, *Hz*

λ is wavelength, *m*

It describes pressure maxima and minima for either a standing or traveling wave. A standing wave is propagated and reflected when a pressure or velocity perturbation encounters a discontinuity in an acoustic system. Resonant conditions will result when the total propagation time up and down the system (from inlet of the long crossover to outlet of the impeller after the crossover) is such that the reflected wave reaches the excitation source in phase with a subsequent perturbation (next blade of the impeller before the crossover in front of volute tongue). Under these conditions the excitation frequency is said to be at one of the natural frequencies of the acoustic system [1].

Elementary physics of organ pipe resonances reveals that reflections from a closed end pipe will cause a pressure maximum (velocity minimum) at that end, while reflection from an open end pipe sustain a velocity maximum (pressure minimum) at the open end. Figure 1 shows the patterns of wave propagation for resonance in three pipe configurations (open-open / closed-closed / open-closed ends). The lowest resonant frequency of these is called the fundamental frequency, wherein the length of the pipe is one-half wavelength of the sound at that frequency [1].

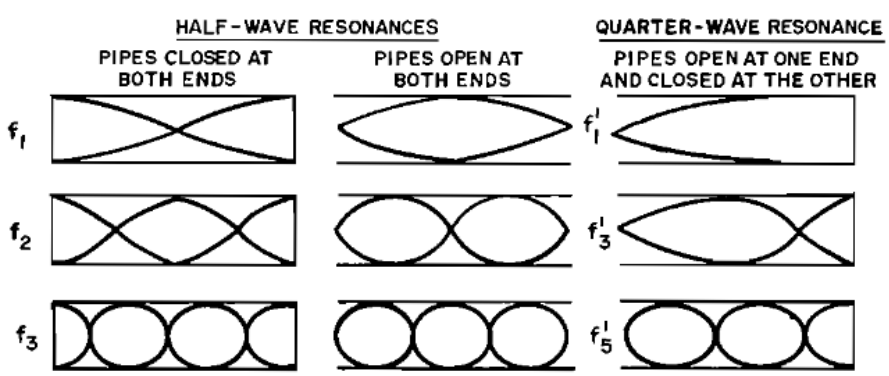

Figure 1. Standing Wave Patterns for Half and Quarter Wave-length Resonance Modes [1]

The resonant frequencies for the various modes in Figure 1 can be calculated from the equation defining the acoustic velocity.

Half-wave resonance:

$$f = N\frac{a}{2L}$$

where

N = 1, 2, 3 . . . harmonic

Quarter-wave resonance:

$$f = (2N - 1)\frac{a}{2L}$$

where

N = 1, 2, 3 . . . harmonic

An open end resonance can usually be sustained if the pipe size suddenly diverges to twice the flow area or, conversely, if the area decreases by a factor of two or more. Sufficient reflection will occur to result in a resonance. The crossover passage of a multistage can be considered an open end pipe as the areas change to reduce the velocity of the fluid being transferred from one stage to another and to distribute the flow uniformly to the inlet of the next impeller. And first formula above applies. However, since changes in area are gradual, it is difficult to predict where a discontinuity exists [1].

5. Methodology, analysis and interpretation of results

Only few input data (yellow cells of Figure 2) are necessary for the calculation spreadsheet:

- Stage length, mm
- Baldes number of impeller at crossover entry
- Required number of stages for pump
- Pump rated speed, rpm
- Minimum/maximum number of stages
- Minimum/maximum pump speed, rpm
- Pump configuration, single or double suction

Then it is necessary to specify the speed of sound in fluid, and it can be done:

- Selecting the fluid from a list of available ones (Figure 3) and the corresponding value of sound velocity is automatically filled in cell C16 and it is used for calculation
- Putting it manually in cell C15 after selecting the option “Manual Input of Sound Velocity” in the list of fluids

This second option is suggested because allows to take into account of actual pump operating conditions (pressure and temperature) which affect the value of sound speed for a certain fluid. The online library of NIST [3] can be used, if customer does not provide data.

Input Data							
Stage length (1 stage)	105	mm		Minimum number of stages	5		
Vane # of impeller @ crossover entry	5			Maximum number of stages	12		
Required number of stages for pump	10			Minimum pump speed	4710	rpm	
Pump rated speed	4710	rpm		Maximum pump speed	5220	rpm	
Crossover passage length @ required number of stages ($L_{A-B-C-D}$)	1503	mm	[1]				
Crossover passage length @ maximum number of stages	*1608*	mm		Crossover passage length @ minimum number of stages	*1188*	mm	
Fluid	Manual Input of Sound Velocity			Pump configuration	Double suction		
Speed of sound in fluid (user input)	950	m/s	[2]	Separation margin shall be >= 20%			
Selected speed of sound in fluid	*950*	m/s					

Figure 2. Input Data of Mod.472 BB3 Crossover Acoustic Resonance

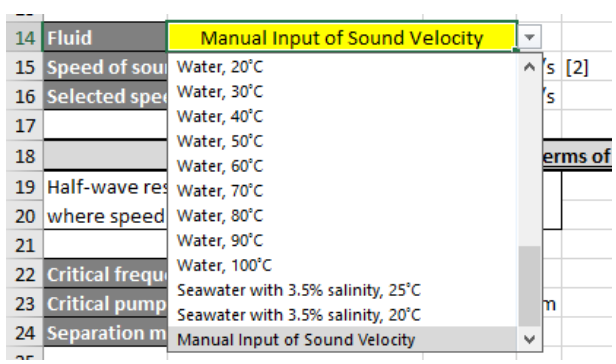

Figure 3. List of available fluids with predefined value for sound speed

But the main input parameter affecting this calculation is of course the crossover passage length to be considered. Experimental test data show that it is important to include also the average path inside the impeller to be more precise in the fundamental frequency estimation (see Figure 4 and Figure 5). Moreover, these physical lengths shall be measured sketching the average path on a 3D model if available.

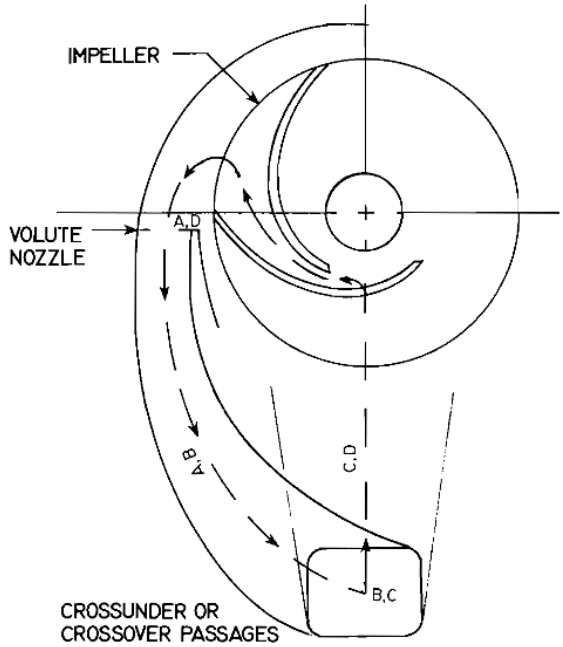

Figure 4. Model of Active Acoustic Length (refer also to Figure 5) [1]

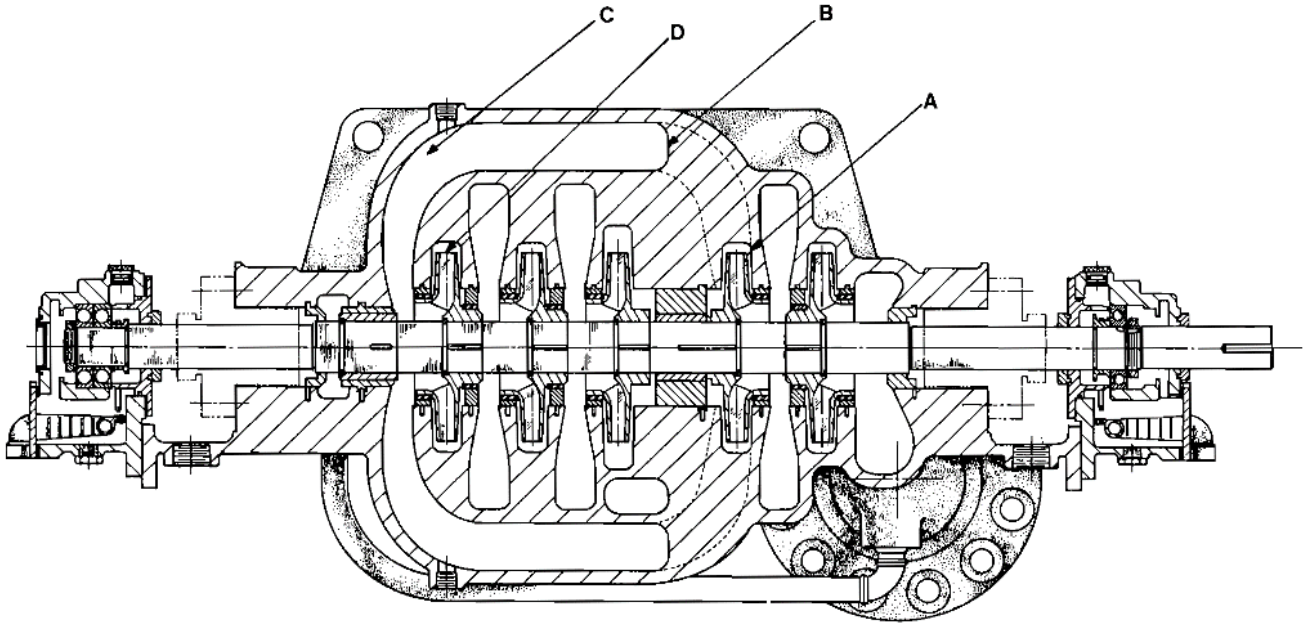

Figure 5. Cross Section of Multistage Centrifugal Pump Showing the Active Acoustic Length [1]

Figure 6 shows an example of a 3D sketch useful to measure the crossover length. To be noted that for the starting point it is necessary to mount the impeller with a blade just in front of the volute tip so to

determine the starting point of an average path. For the impeller instead, it is useful to use BladeModeler software (ANSYS suite) in order to measure the meanline path.

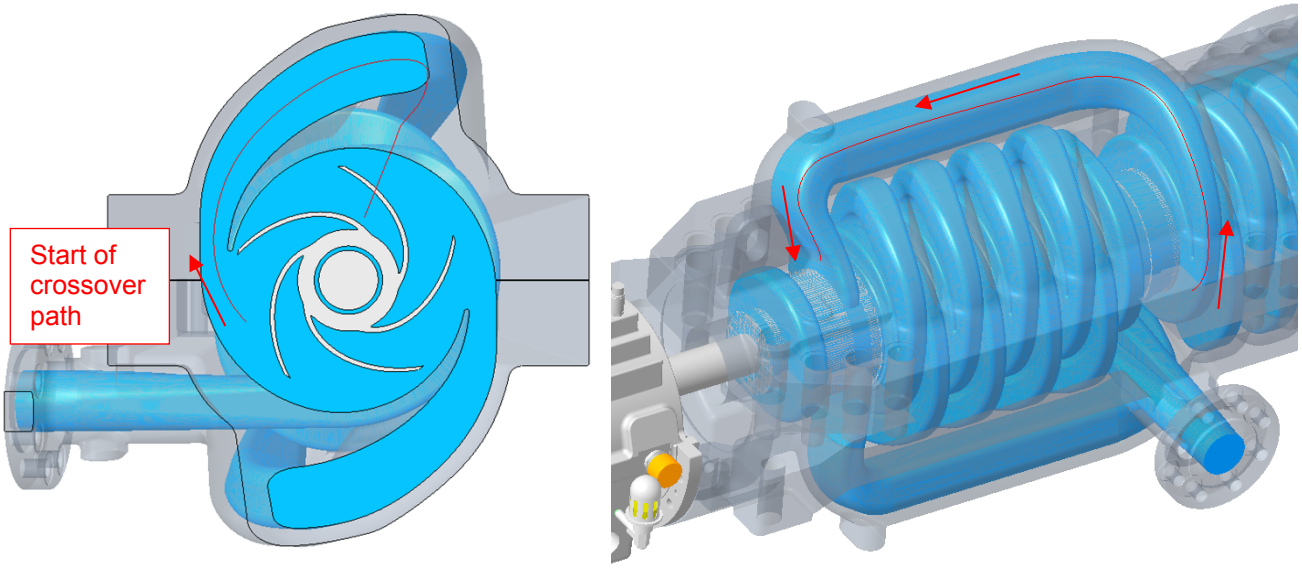

Figure 6. Sketch on 3D Model for Measure of Crossover Passage Length (Red Curve)

In the following results section of the calculation module, there is the first (N=1) critical frequency for half-wave resonance and so corresponding critical pump speed. Shown separation margin is against inserted pump rated speed considering the number of vanes of the impeller feeding the crossover channel.

Output Data in Terms of Frequency		
Half-wave resonance f = N a/(2L), N=1,2,3...harmonic where speed of sound a = λ f		
Critical frequency f	295	Hz
Critical pump speed	3545	rpm
Separation margin @ rated speed	-24.7	%

Figure 7. Output of Calculation Module[2] in Terms of Frequency

The second part of results instead are in terms of critical passage length considering resonance for *λ/2*, *λ* and *3/2λ* at minimum and maximum pump speed. The resulting relative separation margin is calculated comparing actual crossover lengths for minimum, maximum and rated number of stages with these critical values. The same information is available also graphically because in the module there is a plot of how critical lengths for the three resonance configurations (*λ/2*, *λ*, *3/2λ*) vary increasing pump speed from 1000 to 6000 rpm. And then the crossover actual lengths for max, min and rated pump

number of stages is also plotted to see how far they are from the critical curves (see Figure 9). This is useful not only to verify the specific pump of current application at rated number of stage and speed but also to evaluate pump design at min and max stage number within allowable speed range.

Output Data in Terms of Wave Length				
	λ 1/2	λ	λ 3/2	
Critical passage length at 4710 rpm [mm]:	1210	2420	3631	
Critical passage length at 5220 rpm [mm]:	1092	2184	3276	
Separation margin for a 5 stage pump at 4710 [rpm]:	1.9%	103.7%	205.6%	Warning <20%
Separation margin for a 5 stage pump at 5220 [rpm]:	-8.1%	83.8%	175.7%	Warning <20%
Separation margin for a 12 stage pump at 4710 [rpm]:	-24.7%	50.5%	125.8%	
Separation margin for a 12 stage pump at 5220 [rpm]:	-32.1%	35.8%	103.7%	
Separation margin for a 10 stage pump at 4710 rpm:	-19.5%	61.0%	141.6%	Warning <20%
Separation margin for a 10 stage pump at 5220 rpm:	-27.3%	45.3%	118.0%	

Figure 8. Output of Calculation Module[2] in Terms of Wavelength

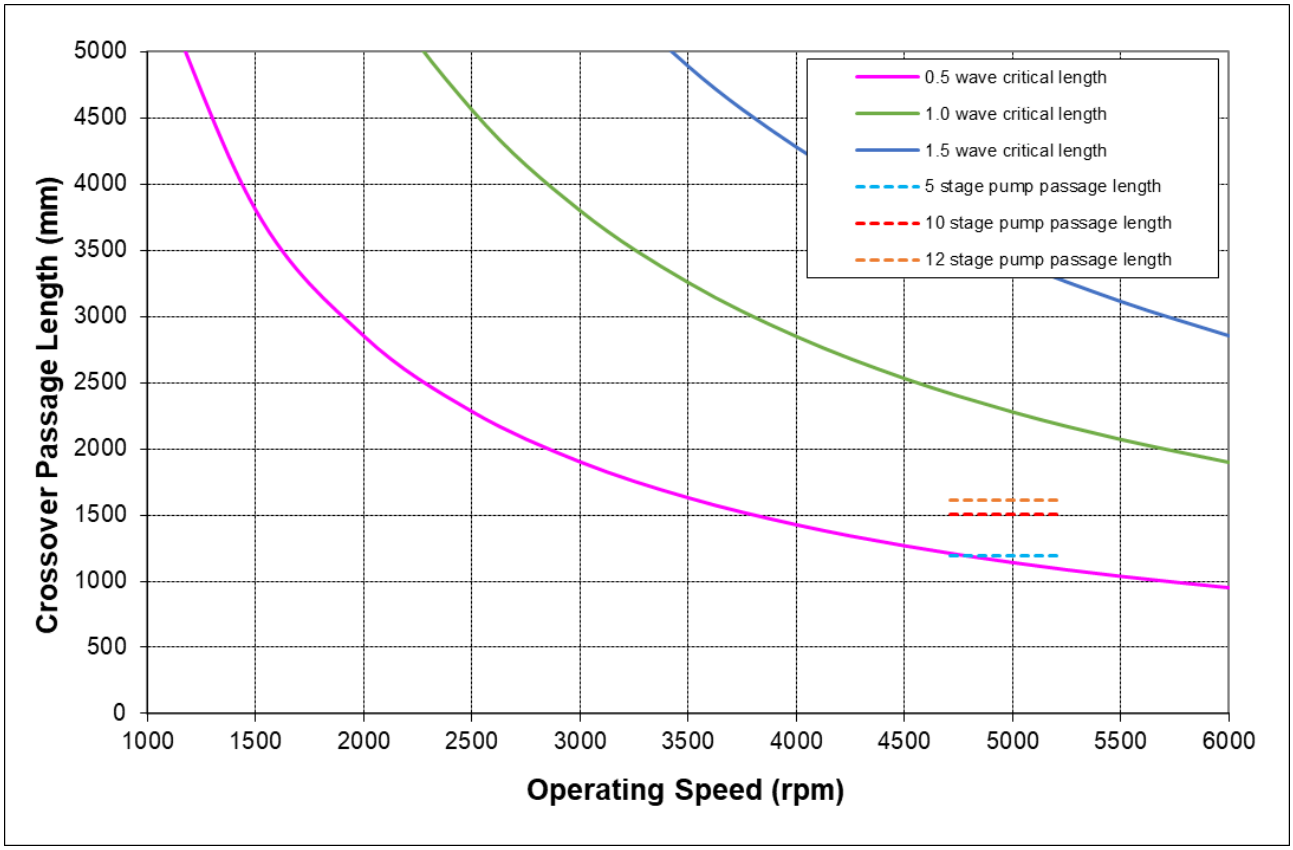

Figure 9. Critical Length and Pump Passage Length Versus Operating Speed[2]

6. Acceptance Criteria

Suggested separation margin between operating speed and critical frequency or corresponding value of pump passage length and critical wavelength is 20%. If this condition is not respected, it shall be evaluated to adopt one of the following countermeasures:

- change the number of impeller vanes for the impeller discharging into the crossover stage
- change the destaging arrangement (if used) to reduce the length of the crossover passage
- lockout certain speed ranges
- use an accumulator attached to the crossover passage to alter the effective speed of sound

7. References

[1] Randal E. Schwartz and Richard M. Nelson, Acoustic Resonance Phenomena in High Energy Variable Speed Centrifugal Pumps, Proceeding of the First International Pump Symposium

[2] Mod.472 – BB3 Crossover Acoustic Resonance

[3] NIST Chemistry WebBook, SRD 69, https://webbook.nist.gov/chemistry/fluid/

8. APPENDIX – Example of application for job 24I003 "Pembina"

This project involves a 10-stage BB3 type pump at high rotational speed pumping butane. The crossover length needs to be verified both for manufacturer's shop test conditions and for site operating conditions because they are completely different, especially as regards sound speed and pump speed.

8.1 Pembina considering fresh water

For the performance test with water, applicable speeds are 3600, 4600 and 4900 rpm. Corresponding separation margins of 69%, 31% and 23% calculated by this procedure are therefore acceptable. See below figures for details.

Acoustic Resonance in BB3 Long Crossovers							
JOB	24I003			Service & Fluid Type	Water		
I.O. Number	86988			Pump Size	TF-AX3-D 3x6x10		
Customer	Rangeland			Date/Name	15-05-2024 / M. Biolo		
Input Data							
Stage length (1 stage)	105	mm		Minimum number of stages	5		
Vane # of impeller @ crossover entry	5			Maximum number of stages	12		
Required number of stages for pump	10			Minimum pump speed	3600	rpm	
Pump rated speed	4900	rpm		Maximum pump speed	4900	rpm	
Crossover passage length @ required number of stages ($L_{A-B-C-D}$)	1503	mm	[1]				
Crossover passage length @ maximum number of stages	*1608*	mm		Crossover passage length @ minimum number of stages	*1188*	mm	
Fluid	Water, 30˚C			Pump configuration	Double suction		
Speed of sound in fluid (user input)		m/s	[2]	Separation margin shall be >= 20%			
Selected speed of sound in fluid	*1507*	m/s					

Figure 10. BB3 Crossover Acoustic Resonance Verification for Pembina Project – Input Data with Water

Output Data in Terms of Frequency

Half-wave resonance f = N a/(2L), N=1,2,3...harmonic
where speed of sound a = λ f

Critical frequency f	501	Hz
Critical pump speed	6016	rpm
Separation margin @ rated speed	67.1	%

Output Data in Terms of Frequency

Half-wave resonance f = N a/(2L), N=1,2,3...harmonic
where speed of sound a = λ f

Critical frequency f	501	Hz
Critical pump speed	6016	rpm
Separation margin @ rated speed	30.8	%

Output Data in Terms of Frequency

Half-wave resonance f = N a/(2L), N=1,2,3...harmonic
where speed of sound a = λ f

Critical frequency f	501	Hz
Critical pump speed	6016	rpm
Separation margin @ rated speed	22.8	%

Figure 11. BB3 Crossover Acoustic Resonance Verification for Pembina Project – Output Data for Water: Frequency

Output Data in Terms of Wavelength

	λ 1/2	λ	λ 3/2	
Critical passage length at 3600 rpm [mm]:	2543	5087	7630	
Critical passage length at 4900 rpm [mm]:	1869	3737	5606	
Separation margin for a 5 stage pump at 3600 [rpm]:	114.1%	328.2%	542.3%	
Separation margin for a 5 stage pump at 4900 [rpm]:	57.3%	214.6%	371.9%	
Separation margin for a 12 stage pump at 3600 [rpm]:	58.2%	216.3%	374.5%	
Separation margin for a 12 stage pump at 4900 [rpm]:	16.2%	132.4%	248.6%	Warning <20%
Separation margin for a 10 stage pump at 3600 rpm:	69.2%	238.4%	407.7%	
Separation margin for a 10 stage pump at 4900 rpm:	24.3%	148.6%	273.0%	

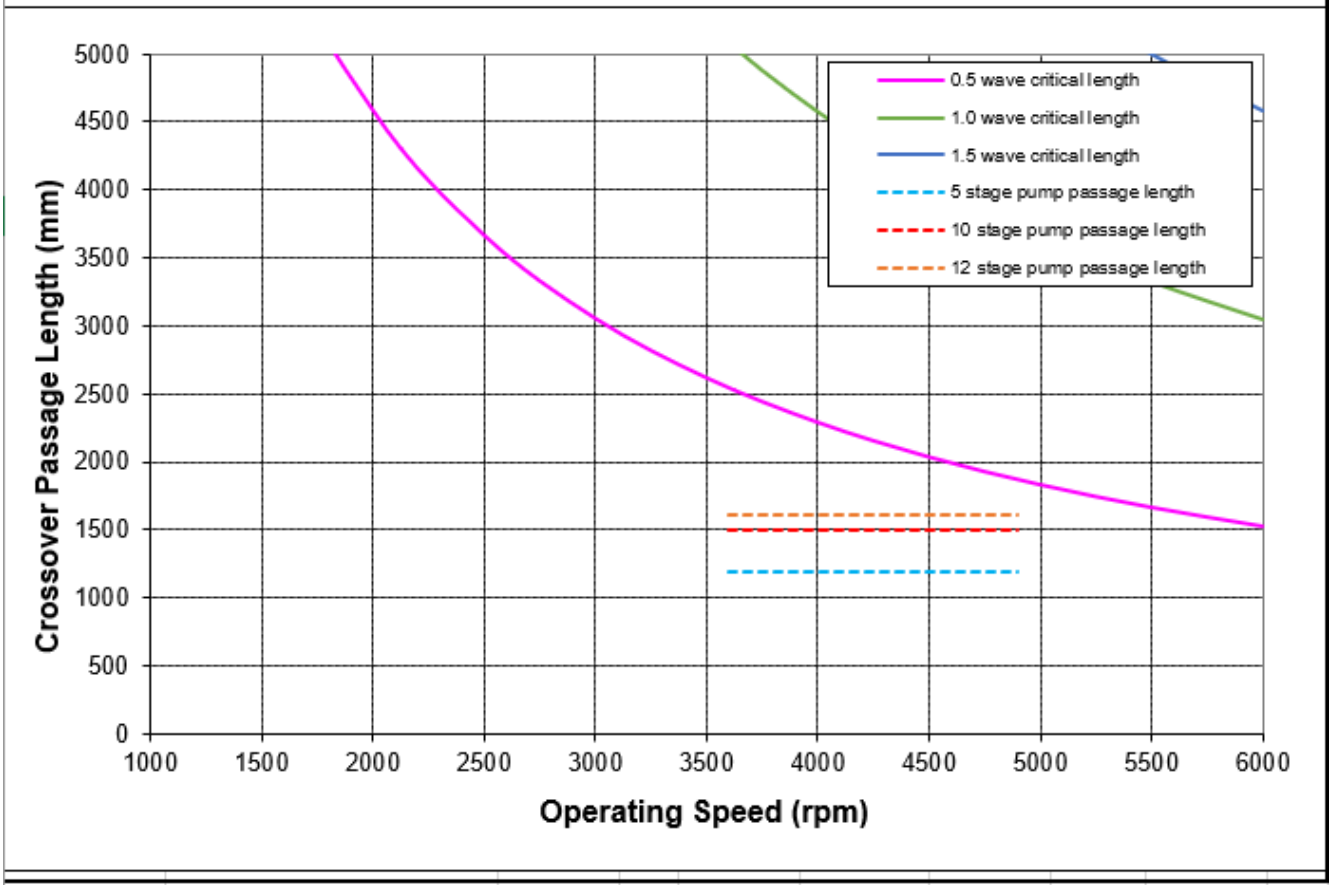

Figure 12. BB3 Crossover Acoustic Resonance Verification for Pembina Project – Output Data for Water: Wavelength

8.2 Pembina considering butane process fluid

At site the pump is variable speed driven and four operating speeds are foreseen. All the operating conditions have been verified and there is minimum 20% margin (see Figure 16) between pump rotational speeds and the critical speeds due to the acoustic phenomena of the long crossover.

Acoustic Resonance in BB3 Long Crossovers							
JOB	24I003			Service & Fluid Type	Butane		
I.O. Number	86988			Pump Size	TF-AX3-D 3x6x10		
Customer	Rangeland			Date/Name	15-05-2024 / M. Biolo		
Input Data							
Stage length (1 stage)	105	mm		Minimum number of stages	5		
Vane # of impeller @ crossover entry	5			Maximum number of stages	12		
Required number of stages for pump	10			Minimum pump speed	4710	rpm	
Pump rated speed	4710	rpm		Maximum pump speed	5220	rpm	
Crossover passage length @ required number of stages ($L_{A-B-C-D}$)	1503	mm	[1]				
Crossover passage length @ maximum number of stages	*1608*	mm		Crossover passage length @ minimum number of stages	*1188*	mm	
Fluid	Manual Input of Sound Velocity			Pump configuration	Double suction		
Speed of sound in fluid (user input)	943	m/s	[2]	Separation margin shall be >= 20%			
Selected speed of sound in fluid	*943*	m/s					

Figure 13. BB3 Crossover Acoustic Resonance Verification for Pembina Project – Input Data with Butane and Most Critical Operating Condition (Minimum Flow at Min Pump Speed)

Output Data in Terms of Frequency		
Half-wave resonance f = N a/(2L), N=1,2,3...harmonic where speed of sound a = λ f		
Critical frequency f	*314*	Hz
Critical pump speed	*3764*	rpm
Separation margin @ rated speed	*-20.1*	%

Figure 14. BB3 Crossover Acoustic Resonance Verification for Pembina Project – Output Data for Butane and Most Critical Operating Condition (Minimum Flow at Min Pump Speed)

Output Data in Terms of Wavelength

	λ 1/2	λ	λ 3/2	
Critical passage length at 4710 rpm [mm]:	1201	2403	3604	
Critical passage length at 5220 rpm [mm]:	1084	2168	3252	
Separation margin for a 5 stage pump at 4710 [rpm]:	1.1%	102.2%	203.4%	Warning <20%
Separation margin for a 5 stage pump at 5220 [rpm]:	-8.8%	82.5%	173.7%	Warning <20%
Separation margin for a 12 stage pump at 4710 [rpm]:	-25.3%	49.4%	124.1%	
Separation margin for a 12 stage pump at 5220 [rpm]:	-32.6%	34.8%	102.2%	
Separation margin for a 10 stage pump at 4710 rpm:	-20.1%	59.9%	139.8%	
Separation margin for a 10 stage pump at 5220 rpm:	-27.9%	44.2%	116.3%	

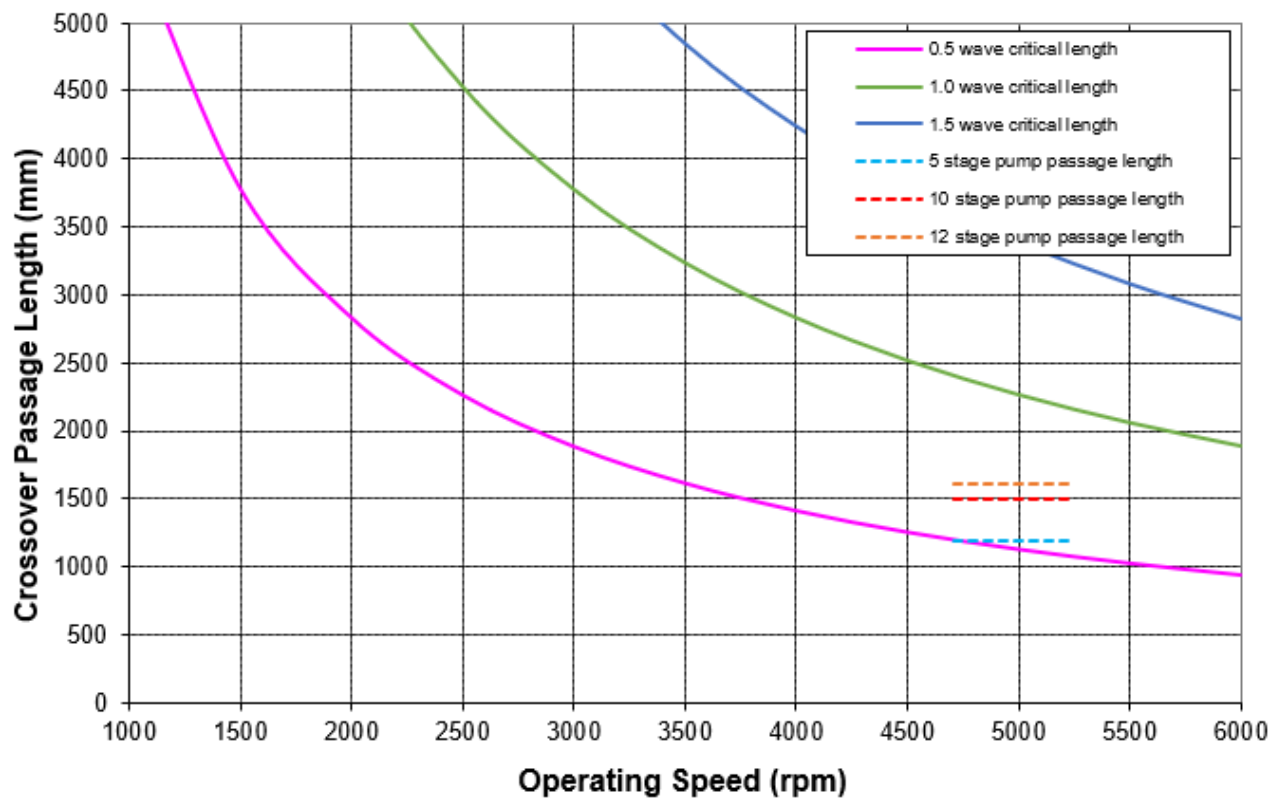

Figure 15. BB3 Crossover Acoustic Resonance Verification for Pembina Project – Output Data for Butane and Most Critical Operating Condition (Minimum Flow at Min Pump Speed)

Rated Flow					
f1=	316.2	Hz	(sound speed	951	m/s)
rpm1=	3794.6	rpm	(5 vanes impeller)		
Min Flow					
f1=	314.3	Hz	(sound speed	943	m/s)
rpm1=	3772.0	rpm	(5 vanes impeller)		
Normal Flow					
f1=	316.2	Hz	(sound speed	950	m/s)
rpm1=	3794.3	rpm	(5 vanes impeller)		
Alt Condition 3					
f1=	315.6	Hz	(sound speed	949	m/s)
rpm1=	3786.6	rpm	(5 vanes impeller)		
Alt Condition 4					
f1=	315.8	Hz	(sound speed	949	m/s)
rpm1=	3789.2	rpm	(5 vanes impeller)		
Pump speeds		**rpm**	**Margin**		
RATED		5220	-27%		
ALT CONDITION 3		4870	-22%		
NORMAL		5180	-27%		
MIN		4710	-20%		
ALT CONDITION 4		4940	-23%		

Figure 16. Table of Results in Terms of Frequency for all Operating Conditions of Pembina Project